PART OR DRAWING NO.	REV.
IF20497	A

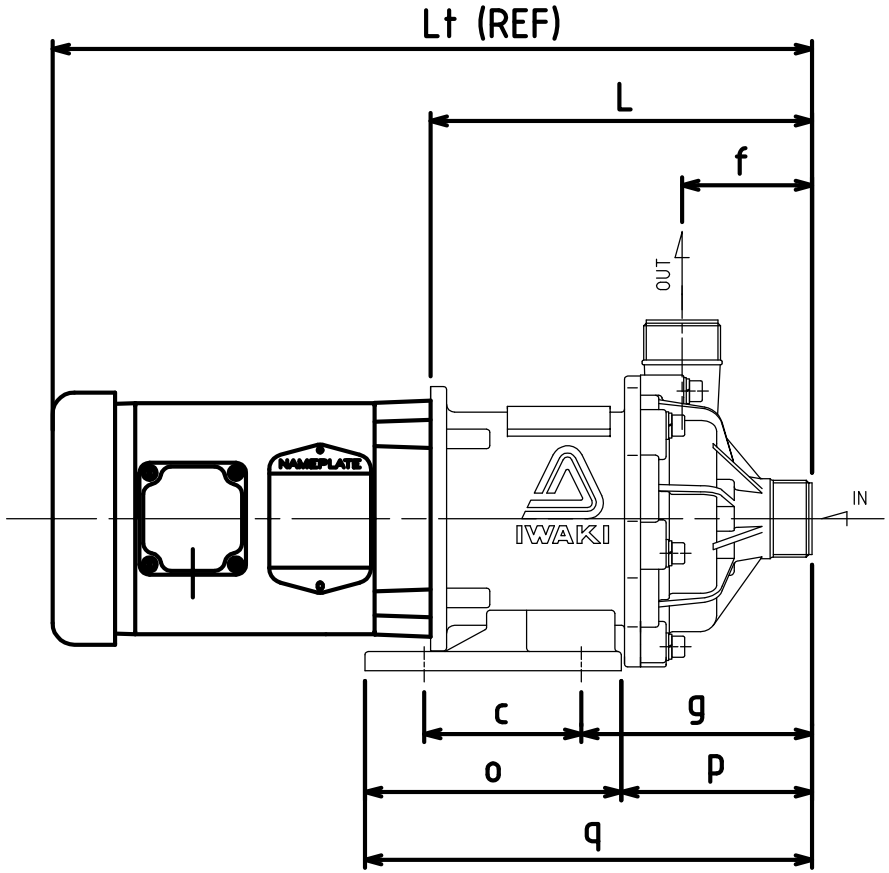

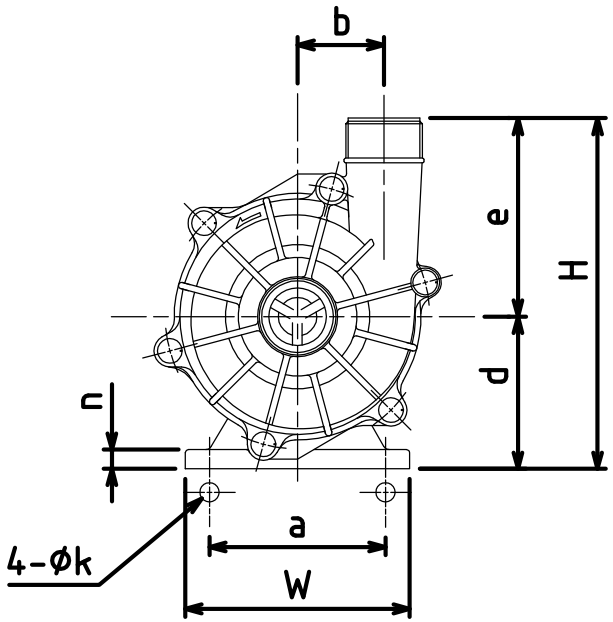

NOTES:
1) SHAPE OF PRODUCT ON DRAWING MAY DIFFER FROM ACTUAL PRODUCT ON SOME POINTS.
2) SOME DIMENSIONS MAY VARY.
3) FLANGES AVAILABLE UPON REQUEST.
4) PUMP DRAWN FROM 22B402549.

MODEL	SUCTION	DISCHARGE
MX-(F)400	1.5" MNPT	1.5" MNPT

MODEL	HP/FRAME	W	H	L	Lt (REF)
MX-(F)400	.5/.75 / 56C	5.51	8.62	9.37	18.66

MODEL	a	b	c	d	e	f	g	k	n	o	p	q
MX-(F)400	4.33	2.13	3.86	3.74	4.88	3.19	5.67	.47	.47	6.30	4.69	10.98

ECO#	DESCRIPTION	DATE	REV. LTR.

MATERIAL: GFRPP (CFRETFE)

DRAWN	DAY	MO.	YR.	RELEASED	SHEET NO.
CJC	15	12	03		

Iwaki America Corp.
5 Boynton Rd.
Hopping Brook Park
Holliston, MA 01746
www.IwakiAmerica.com (508)429-1440

PART OR DWG. NO.: MX-(F)400, 1

TITLE: MX-(F)400
.5/.75 HP / 56C FRAME

REV.: A